GENERAL DRAWING NOTES

(APPLY TO THIS DRAWING ONLY)

1. EXISITING FIXTURES NOT INDICATED TO BE REMOVED SHALL REMAIN IN PLACE.
2. REMOVE PIPING SERVING PLUMBING CHASES TO POINT ABOVE CHASE. LEAVE STUB AT DROP INTO CHASE FOR FUTURE CONNECTION. EXCEPT WHERE INDICATED OTHERWISE, EXISTING HOT AND COLD WATER SANITARY AND VENT PIPING WITHIN CHASES SHALL REMAIN.

   EXCEPT WHERE INDICATED OTHERWISE, EXISTING COLD WATER, HOT WATER, SANITARY AND VENT PIPING WITHIN TOILET ROOM PLUMBING CHASES SHALL REMAIN.

DRAWING NOTES

(APPLY TO THIS DRAWING ONLY)

1. REMOVE EXISTING FIXTURE AND ALL ASSOCIATED PIPING AND APPURTENANCES TO POINT OF CONCEALMENT AND CAP.
2. REMOVE EXISTING FLOOR DRAIN. PLUG SANITARY BELOW SLAB.
3. REMOVE EXISTING TEMPERING VALVE ALONG WITH ALL SUPPLY PIPING.
4. REMOVE EXISTING HOT AND COLD WATER PIPE DOWN IN CHASE. LEAVE STUB ON COLD WATER AT END OF CHASE FOR FUTURE CONNECTION.
5. REMOVE EXISTING SHOWER CONTROL CONSOLE AND ASSOCIATED PIPING.
6. EXISTING 2"COLD WATER AND 3/4" HOT WATER UP TO CHASE ABOVE TO REMAIN. LEAVE STUBS BELOW SECOND FLOOR SLAB FOR FUTURE CONNECTION. REMOVE EXISTING PIPING FROM MAIN FOR EXTENT INDICATED. REMOVE EXISITING SUPPLY PIPING TO SHOWER.
7. REMOVE EXISTING END SUCTION FIRE PUMP IN PIT. EXISTING PIPING, VALVING AND APPURTENANCES SHALL REMAIN IN PLACE FOR CONNECTION TO NEW PUMP.
8. REMOVE EXISTING URINAL AND ALL ASSOCIATED SUPPORTS AND PIPING TO POINT OF CONCEALMENT AND CAP.
9. REMOVE EXISTING LAVATORY AND ALL ASSOCIATED PIPING AND APPURTENANCES TO POINT OF CONCEALMENT AND CAP.
10. REMOVE EXISTING WATER CLOSET AND ALL ASSOCIATED SUPPORTS, APPURTENANCES AND PIPING TO POINT OF CONCEALMENT AND CAP. PATCH SURFACES TO MATCH EXISTING.
11. RELOCATE EXISTING URINAL TO NEW MEN'S ROOM. REMOVE EXISTING SUPPORTS, APPURTENANCES AND PIPING TO POINT OF CONCEALMENT AND CAP. PATCH SURFACES TO MATCH EXISTING.
12. RELOCATE EXISTING LAVATORY. REMOVE EXISTING SUPPORTS, APPURTENANCES AND PIPING BACK TO WALL. LEAVE STUB AT WALL FOR FUTURE CONNECTIONS.
13. RELOCATE EXISTING WATER CLOSET. REMOVE EXISTING SUPPORTS, APPURTENANCES AND PIPING TO POINT OF CONCEALMENT AND CAP. PATCH SURFACES TO MATCH EXISTING.
14. REMOVE EXISTING TEMPERED WATER SERVICE PIPE TO TOP OF SHOWER ENCLOSURE. LEAVE STUB FOR CONNECTION UNDER NEW WORK.
15. REMOVE PORTION OF EXISTING 3" SANITARY BELOW SLAB. PLUG ONE END. LEAVE OTHER FOR CONNECTION UNDER NEW WORK.
16. EXISTING JANITOR SINK AND ASSOCIATED PIPING WITHIN WALL TO REMAIN. SANITARY AND VENT PIPING SHALL REMAIN IN TACT. REMOVE HOT WATER AND COLD WATER PIPING ABOVE WALL FOR EXTENT INDICATED.
17. REMOVE EXISTING WASHER DRAIN TO POINT OF CONCEALMENT AND PLUG.
18. REMOVE EXISTING TEMPERED WATER DOWN TO SHOWER ENCLOSURE.
19. EXISTING URINAL TO REMAIN.
20. REMOVE TRIM FROM EXISTING LAVATORY TO REMAIN.

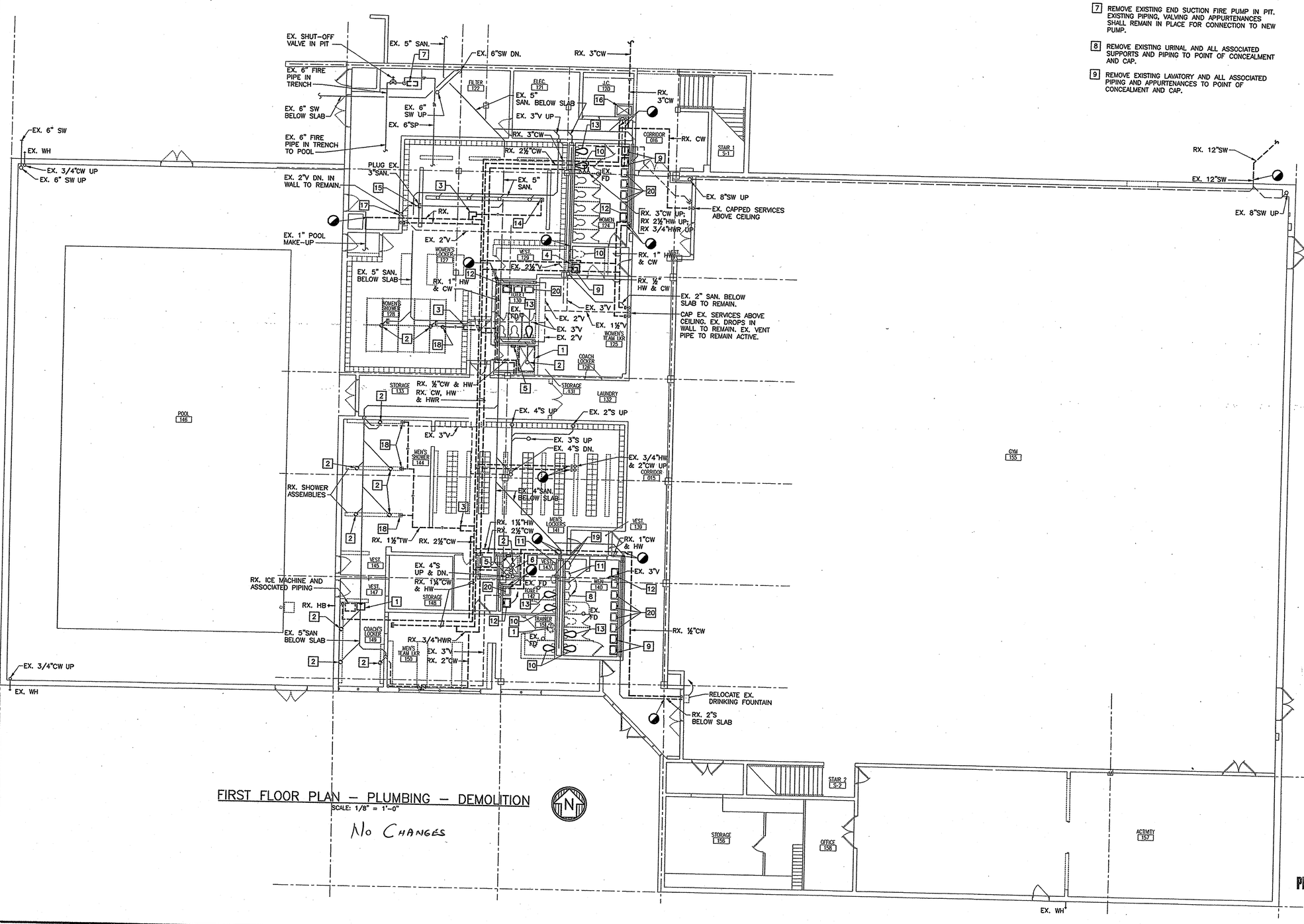

FIRST FLOOR PLAN – PLUMBING – DEMOLITION

SCALE: 1/8" = 1'-0"

No Changes

PROJECT RECORD DRAWINGS

SCALE: 1/8" = 1'-0"

RECEIVED JUN 17 2005

RECEIVED OCT 25 2004 GPE ASSOC.

College of Southern Maryland

Gipe Associates Inc. Consulting Engineers
Baltimore, Maryland
Easton, Maryland
GAI WO# 01044

"THIS DRAWING AND THE DESIGN AND CONSTRUCTION FEATURES DISCLOSED HEREIN ARE PROPRIETARY TO GIPE ASSOCIATES, INC. AND SHALL NOT BE USED, ALTERED OR REUSED IN WHOLE OR IN PART WITHOUT THE EXPRESS WRITTEN PERMISSION OF GIPE ASSOCIATES, INC. Copyright © 2001

Grimm and Parker Architects

1355 Beverly Rd.
Suite 105
McLean VA 22101
703.903.9100
703.903.9755 Fax

FIRST FLOOR PLAN – PLUMBING
DEMOLITION
COLLEGE OF SOUTHERN MARYLAND WELLNESS CENTER
LA PLATA, MARYLAND

DATE	DESCRIPTION
12-12-01	DD SUBMITTAL
2-8-02	DDS SUBMISSION
4-11-02	BID SET
4/30/05	Bid Set

© GRIMM AND PARKER,P.C. 2001

P1.1

P:\JOBS\2001\01044\plumbing\01044P1-1.dwg, 04/11/02 05:53:49 AM, jpg, 1:96

GENERAL DRAWING NOTES:
(APPLY TO THIS DRAWING ONLY)

1. EXCEPT WHERE INDICATED OTHERWISE, EXISTING COLD WATER, HOT WATER, SANITARY AND VENT PIPING WITHIN TOILET ROOM PLUMBING CHASES SHALL REMAIN.
2. EXCEPT WHERE INDICATED OTHERWISE, REMOVE EXISTING ROOF DRAINS. LEAVE PIPING INPLACE FOR RECONNECTION TO NEW DRAIN.

DRAWING NOTES:
(APPLY TO THIS DRAWING ONLY)

1. REMOVE EXISTING HOT WATER GENERATOR WITH ALL ASSOCIATED PIPING AND APPURTENANCES INCLUDING HEATING WATER PUMP AND HOT WATER RECIRCULATION PUMP.
2. REMOVE EXISTING 2½" COLD WATER, HOT WATER AND 3/4" HOT WATER RECIRCULATION PIPING DOWN.
3. REMOVE EXISTING URINAL AND ALL ASSOCIATED SUPPORTS AND PIPING TO POINT OF CONCEALMENT AND CAP.
4. REMOVE EXISTING LAVATORY AND ALL ASSOCIATED PIPING AND APPURTENANCES TO POINT OF CONCEALMENT AND CAP.
5. REMOVE EXISTING WATER CLOSET AND ALL ASSOCIATED SUPPORTS, APPURTENANCES AND PIPING TO POINT OF CONCEALMENT AND CAP. PATCH SURFACES TO MATCH EXISTING.
6. RELOCATE EXISTING URINAL TO NEW MEN'S ROOM. REMOVE EXISTING SUPPORTS, APPURTENANCES AND PIPING TO POINT OF CONCEALMENT AND CAP. PATCH SURFACES TO MATCH EXISTING.
7. RELOCATE EXISTING LAVATORY. REMOVE EXISTING SUPPORTS, APPURTENANCES AND PIPING TO POINT OF CONCEALMENT AND CAP. PATCH SURFACES TO MATCH EXISTING.
8. RELOCATE EXISTING WATER CLOSET. REMOVE EXISTING SUPPORTS, APPURTENANCES AND PIPING TO POINT OF CONCEALMENT AND CAP. PATCH SURFACES TO MATCH EXISTING.

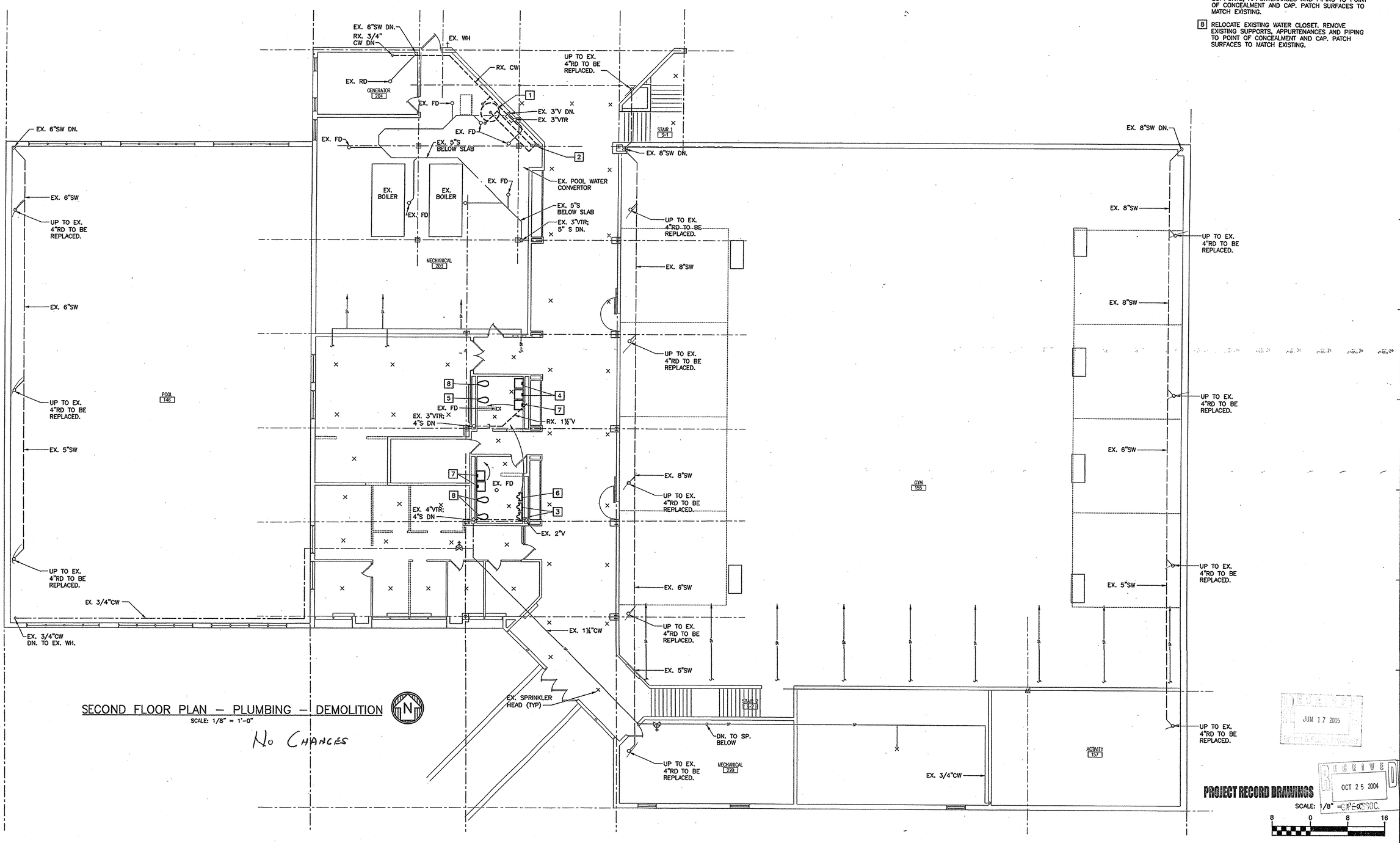

SECOND FLOOR PLAN – PLUMBING – DEMOLITION

SCALE: 1/8" = 1'-0"

No Changes

RECEIVED JUN 17 2005

RECEIVED OCT 25 2004

PROJECT RECORD DRAWINGS

SCALE: 1/8" = 1'-0"

8 0 8 16

College of Southern Maryland

Gipe Associates Inc.
Consulting Engineers
Baltimore, Maryland
Easton, Maryland
GAI WO# 01044

"THIS DRAWING AND THE DESIGN AND CONSTRUCTION FEATURES DISCLOSED ARE PROPRIETARY TO GIPE ASSOCIATES AND SHALL NOT BE ALTERED OR REUSED IN WHOLE OR IN PART WITHOUT THE EXPRESS WRITTEN PERMISSION OF GIPE ASSOCIATES, INC. Copyright © 2001

1355 Beverly Rd.
Suite 105
McLean VA 22101
703.903.9100
703.903.9755 Fax

Grimm and Parker Architects

SECOND FLOOR PLAN – PLUMBING
DEMOLITION
COLLEGE OF SOUTHERN MARYLAND WELLNESS CENTER
LA PLATA, MARYLAND

DATE	DESCRIPTION
12-12-01	DD SUBMITTAL
2-8-02	DGS SUBMISSION
4-11-02	BID SET
4/24/03	BID SET

© GRIMM AND PARKER, P.C. 2001

P1.2

DGS# - CC-09-MC

P:\JOBS\2001\01044\plumbing\01044P1.2.dwg, 04/11/02 09:53:02 AM, jpg, 1:96

DRAWING NOTES:

(APPLY TO THIS DRAWING ONLY)

1. ½" CW DOWN TO ICE MAKER. PROVIDE WATTS 7 SERIES BFP AND HALSEY TAYLOR MODEL 15242 IN-LINE FILTER IN HORIZONTAL PIPE.
2. CONNECT TO EXISTING STORM WATER AT WALL. TURN DOWN WITH ELBOW TO EXTEND DOWN TO INVERT ELEVATION 183.5±.
3. RELOCATE EXISTING LAVATORY TO ADULT ADA HEIGHT 34" AFF. PROVIDE NEW TRIM. EXTEND EXISTING SERVICES AS REQUIRED AND MAKE FINAL CONNECTIONS.
4. EX. LAVATORY TO REMAIN. PROVIDE NEW TRIM.
5. RELOCATE EXISTING URINAL AND ASSOCIATED TRIM PER ARCHITECTURAL DRAWINGS. EXTEND SERVICES AS REQUIRED AND MAKE FINAL CONNECTIONS.
6. RELOCATE EXISTING WATER CLOSET PER ARCHITECTURAL DRAWINGS. MOUNT AT ADULT ADA HEIGHT 17" AFF TO RIM. EXTEND EXISTING SERVICES WITHIN CHASE AS REQUIRED AND MAKE FINAL CONNECTIONS.
7. EXISTING WATER CLOSET TO REMAIN.
8. RELOCATE EXISITING URINAL. REMOUNT AT ADULT ADA HEIGHT 17" AFF TO RIM.
9. 4" OPEN HUB DRAIN. FINISH FLUSH WITH BOTTOM OF TROUGH.
10. RELOCATED LAVATORY FROM WOMEN'S TOILET ROOM. CONNECT TO EXISTING SERVICES IN CHASE. PROVIDE NEW TRIM.
11. 3/4"HB WITH VACUUM BREAKER ON CW & HW. MOUNT 36" ABOVE FLOOR.
12. EXISTING URINAL TO REMAIN.
13. 3" TEMPORARY CONNECTION FROM NEW 3" INCOMING SERVICE TO EXISTING 3" SERVICE THROUGH BUILDING. PROVIDE ¾" HOSE END DRAIN AT CONNECTION TO EXISTING FOR DRAIN DOWN INTO JANITOR SINK AT TIME OF DELETION OF EXISTING PIPING.

GENERAL DRAWING NOTES:

(APPLY TO THIS DRAWING ONLY)

1. REMOVE/RELOCATE EXISITNG SPRINKLER HEADS TO COORDINATE WITH NEW PARTITION LAYOUT. PROVIDE NEW HEADS AND PRIMARY AND SECONDARY PIPING AS REQUIRED TO SUIT NEW ROOMS.

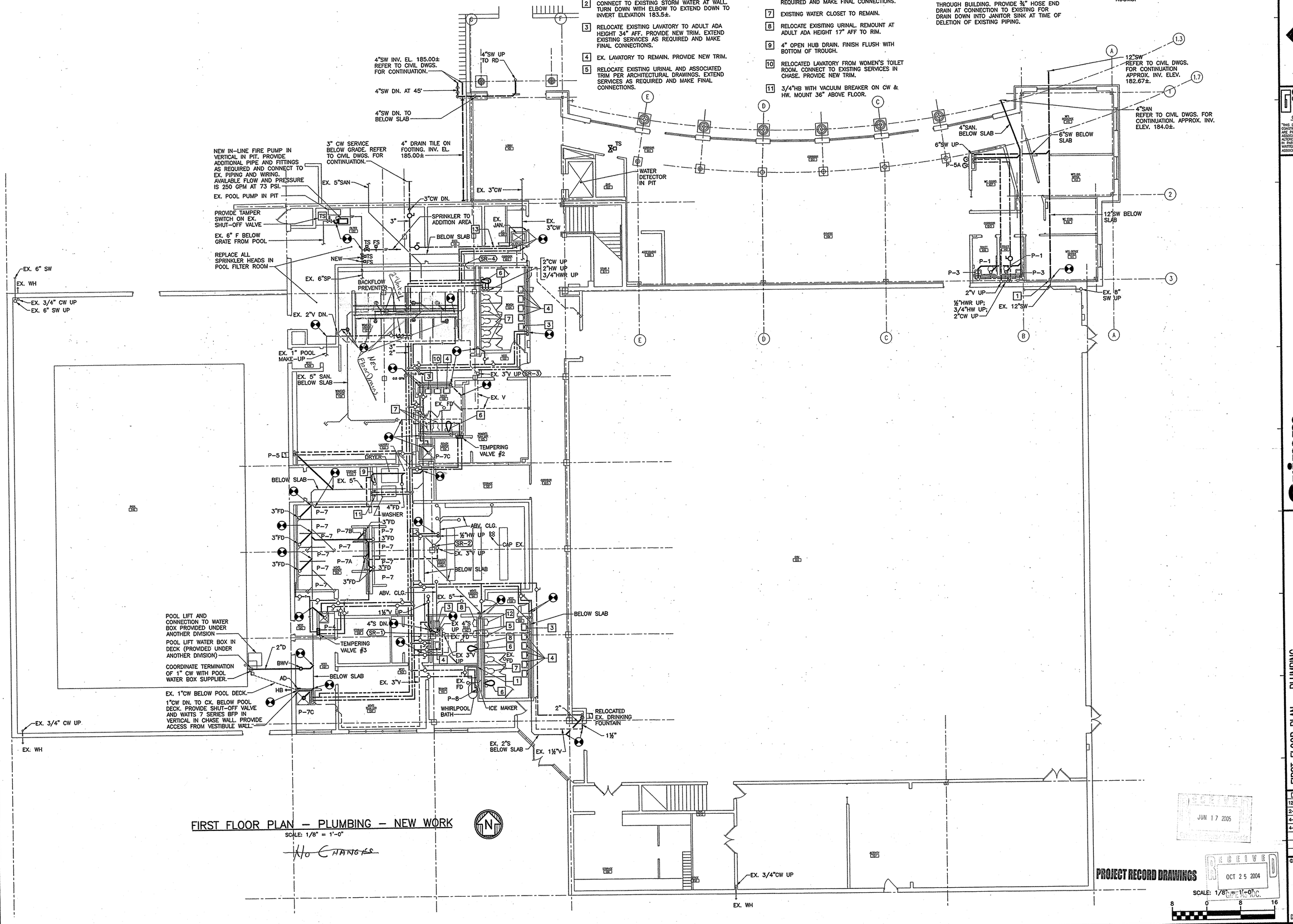

FIRST FLOOR PLAN – PLUMBING – NEW WORK

SCALE: 1/8" = 1'-0"

NO CHANGES

N

RECEIVED
JUN 17 2005

RECEIVED
OCT 25 2004

PROJECT RECORD DRAWINGS

SCALE: 1/8" = 1'-0" ORIG. P.C.

8 0 8 16

college of southern maryland

Gipe Associates Inc.
Consulting Engineers
Baltimore, Maryland
Easton, Maryland
GAI WO# 01044

"THIS DRAWING AND THE DESIGN AND CONSTRUCTION FEATURES DISCLOSED ARE PROPRIETARY TO GIPE ASSOCIATES, INC. AND SHALL NOT BE ALTERED OR REUSED IN WHOLE OR IN PART WITHOUT THE EXPRESS WRITTEN PERMISSION OF GIPE ASSOCIATES, INC. Copyright © 2001"

1355 Beverly Rd.
Suite 105
McLean VA 22101
703.903.9100
703.903.9755 Fax

Grimm and Parker Architects

FIRST FLOOR PLAN – PLUMBING
NEW WORK
COLLEGE OF SOUTHERN MARYLAND WELLNESS CENTER
LA PLATA, MARYLAND

DATE	DESCRIPTION
12-12-01	DD SUBMITTAL
2-8-02	DGS SUBMISSION
4-11-02	BID SET
4-30-03	BID SET

© GRIMM AND PARKER,P.C. 2001

P2.1

DGS# - CC-09-MC99-311

DRAWING NOTES:

(APPLY TO THIS DRAWING ONLY)

1. ½" CW DOWN TO ICE MAKER. PROVIDE WATTS 7 SERIES BFP AND HALSEY TAYLOR MODEL 15242 IN-LINE FILTER IN HORIZONTAL PIPE.
2. CONNECT TO EXISTING STORM WATER AT WALL. TURN DOWN WITH ELBOW TO EXTEND DOWN TO INVERT ELEVATION 183.5±.
3. RELOCATE EXISTING LAVATORY TO ADULT ADA HEIGHT 34" AFF. PROVIDE NEW TRIM. EXTEND EXISTING SERVICES AS REQUIRED AND MAKE FINAL CONNECTIONS.
4. EX. LAVATORY TO REMAIN. PROVIDE NEW TRIM.
5. RELOCATE EXISTING URINAL AND ASSOCIATED TRIM PER ARCHITECTURAL DRAWINGS. EXTEND SERVICES AS REQUIRED AND MAKE FINAL CONNECTIONS.
6. RELOCATE EXISTING WATER CLOSET PER ARCHITECTURAL DRAWINGS. MOUNT AT ADULT ADA HEIGHT 17" AFF TO RIM. EXTEND EXISTING SERVICES WITHIN CHASE AS REQUIRED AND MAKE FINAL CONNECTIONS.
7. EXISTING WATER CLOSET TO REMAIN.
8. RELOCATE EXISITING URINAL. REMOUNT AT ADULT ADA HEIGHT 17" AFF TO RIM.
9. 4" OPEN HUB DRAIN. FINISH FLUSH WITH BOTTOM OF TROUGH.
10. RELOCATED LAVATORY FROM WOMEN'S TOILET ROOM. CONNECT TO EXISTING SERVICES IN CHASE. PROVIDE NEW TRIM.
11. 3/4"HB WITH VACUUM BREAKER ON CW & HW. MOUNT 36" ABOVE FLOOR.
12. EXISTING URINAL TO REMAIN.
13. 3" TEMPORARY CONNECTION FROM NEW 3" INCOMING SERVICE TO EXISTING 3" SERVICE THROUGH BUILDING. PROVIDE ¾" HOSE END DRAIN AT CONNECTION TO EXISTING FOR DRAIN DOWN INTO JANITOR SINK AT TIME OF DELETION OF EXISTING PIPING.

GENERAL DRAWING NOTES:

(APPLY TO THIS DRAWING ONLY)

1. REMOVE/RELOCATE EXISITNG SPRINKLER HEADS TO COORDINATE WITH NEW PARTITION LAYOUT. PROVIDE NEW HEADS AND PRIMARY AND SECONDARY PIPING AS REQUIRED TO SUIT NEW ROOMS.

4"SW INV. EL. 185.00± REFER TO CIVIL DWGS. FOR CONTINUATION.
4"SW DN. AT 45°
4"SW DN. TO BELOW SLAB
4"SW UP TO RD
NEW IN-LINE FIRE PUMP IN VERTICAL IN PIT. PROVIDE ADDITIONAL PIPE AND FITTINGS AS REQUIRED AND CONNECT TO EX. PIPING AND WIRING. AVAILABLE FLOW AND PRESSURE IS 250 GPM AT 73 PSI.
EX. POOL PUMP IN PIT
PROVIDE TAMPER SWITCH ON EX. SHUT-OFF VALVE
EX. 6" F BELOW GRATE FROM POOL
REPLACE ALL SPRINKLER HEADS IN POOL FILTER ROOM
3" CW SERVICE BELOW GRADE. REFER TO CIVIL DWGS. FOR CONTINUATION.
4" DRAIN TILE ON FOOTING. INV. EL. 185.00±
EX. 5"SAN
3"CW DN.
EX. 3"CW
TS
WATER DETECTOR IN PIT
SPRINKLER TO ADDITION AREA
BELOW SLAB
EX. JAN.
EX. 3"CW
TS FS
OTS OFS
NEW
SR-4
2"CW UP
2"HW UP
3/4"HWR UP
EX. 6"SW
EX. WH
EX. 3/4" CW UP
EX. 6" SW UP
EX. 6"SW
BACKFLOW PREVENTER
EX. 3"FD
EX. 2"V DN.
P-7B
EX. 1" POOL MAKE-UP
EX. 5" SAN. BELOW SLAB
EX. 3"V UP
SR-3
EX. V
EX. FD
TEMPERING VALVE #2
P-7C
P-5
DRYER
BELOW SLAB
EX. 5"
4"FD
WASHER
P-7
P-7A
ABV. CLG.
½"HW UP
SR-2
CAP EX.
EX. 3"V UP
BELOW SLAB
1½"V UP
4"S DN.
SR
TEMPERING VALVE #3
POOL LIFT AND CONNECTION TO WATER BOX PROVIDED UNDER ANOTHER DIVISION
POOL LIFT WATER BOX IN DECK (PROVIDED UNDER ANOTHER DIVISION)
COORDINATE TERMINATION OF 1" CW WITH POOL WATER BOX SUPPLIER.
EX. 1"CW BELOW POOL DECK.
1"CW DN. TO CX. BELOW POOL DECK. PROVIDE SHUT-OFF VALVE AND WATTS 7 SERIES BFP IN VERTICAL IN CHASE WALL. PROVIDE ACCESS FROM VESTIBULE WALL.
2"D
BWV
AD
HB
EX. 3/4" CW UP
EX. WH
EX. 3"V
EX. 4"S
EX. 3"V UP
EX. FD
P-8
WHIRLPOOL BATH
ICE MAKER
2"
RELOCATED EX. DRINKING FOUNTAIN
1½"
EX. 2"S BELOW SLAB
EX. 1½"V
BELOW SLAB
4"SAN
12"SW REFER TO CIVIL DWGS. FOR CONTINUATION APPROX. INV. ELEV. 182.67±.
4"SAN REFER TO CIVIL DWGS. FOR CONTINUATION. APPROX. INV. ELEV. 184.0±.
4"SAN. BELOW SLAB
6"SW UP
P-5A
6"SW BELOW SLAB
12"SW BELOW SLAB
P-1
P-3
2"V UP
½"HWR UP; 3/4"HW UP; 2"CW UP
EX. 12"SW
EX. 8" SW UP
EX. 3/4"CW UP
EX. WH

FIRST FLOOR PLAN – PLUMBING – NEW WORK

SCALE: 1/8" = 1'-0"

PROJECT RECORD DRAWINGS

SCALE: 1/8" = 1'-0"

8 0 8 16

RECEIVED JUN 17 2005

RECEIVED OCT 25 2004 GIPE ASSOC.

College of Southern Maryland
Gipe Associates Inc.
Consulting Engineers
Baltimore, Maryland
Easton, Maryland
GAI WO# 01044

"THIS DRAWING AND THE DESIGN AND CONSTRUCTION FEATURES DISCLOSED ARE PROPRIETARY TO GIPE ASSOCIATES, INC. AND SHALL NOT BE ALTERED OR REUSED IN WHOLE OR IN PART WITHOUT THE EXPRESS WRITTEN PERMISSION OF GIPE ASSOCIATES, INC. Copyright © 2001"

1355 Beverly Rd.
Suite 105
McLean VA 22101
703.903.9100
703.903.9755 Fax

Grimm and Parker Architects

FIRST FLOOR PLAN – PLUMBING
NEW WORK
COLLEGE OF SOUTHERN MARYLAND WELLNESS CENTER
LA PLATA, MARYLAND

DATE	DESCRIPTION
12-12-01	DD SUBMITTAL
2-8-02	DGS SUBMISSION
4-11-02	BID SET
4-30-03	BID SET

© GRIMM AND PARKER,P.C. 2001

P2.1

DGS# - CC-09-MC99

DRAWING NOTES:

(APPLY TO THIS DRAWING ONLY)

1. RELOCATED EXISTING URINAL. EXTEND EXISTING PIPING WITHIN CHASE AND MAKE FINAL CONNECTION. MOUNT AT ADA COMPLIANT HEIGHT 17"AFF TO RIM.
2. RELOCATED EXISTING LAVATORY. EXTEND EXISTING PIPING AND MAKE FINAL CONNECTIONS. PRIVIDE NEW TRIM. MOUNT FIXTURE AT STANDARD ADULT HEIGHT.
3. RELOCATED EXISTING WATER CLOSET. EXTEND EXISTING PIPING WITHIN CHASE AND MAKE FINAL CONNECTIONS. MOUNT FIXTURE AT STANDARD ADULT HEIGHT.
4. RELOCATED EXISTING LAVATORY. EXTEND EXISTING PIPING WITHIN CHASE AND MAKE FINAL CONNECTIONS. PROVIDE NEW TRIM. MOUNT FIXTURE AT ADULT ADA COMPLIANT HEIGHT 34" AFF TO RIM.
5. RELOCATED EXISTING WATER CLOSET. EXTEND EXISTING PIPING WITHIN CHASE AND MAKE FINAL CONNECTIONS. MOUNT FIXTURE AT ADULT ADA COMPLIANT HEIGHT 17" AFF TO RIM.
6. CONNECT TO OVERFLOW SCUPPER. REFER TO ARCHITECTURAL DRAWINGS FOR EXACT LOCATION AND DETAILS.

GENERAL DRAWING NOTES

(APPLY TO THIS DRAWING ONLY)

1. REMOVE/RELOCATE EXISITNG SPRINKLER HEADS TO COORDINATE WITH NEW PARTITION LAYOUT. PROVIDE NEW HEADS AND PIPING AS REQUIRED TO SUIT NEW ROOMS.

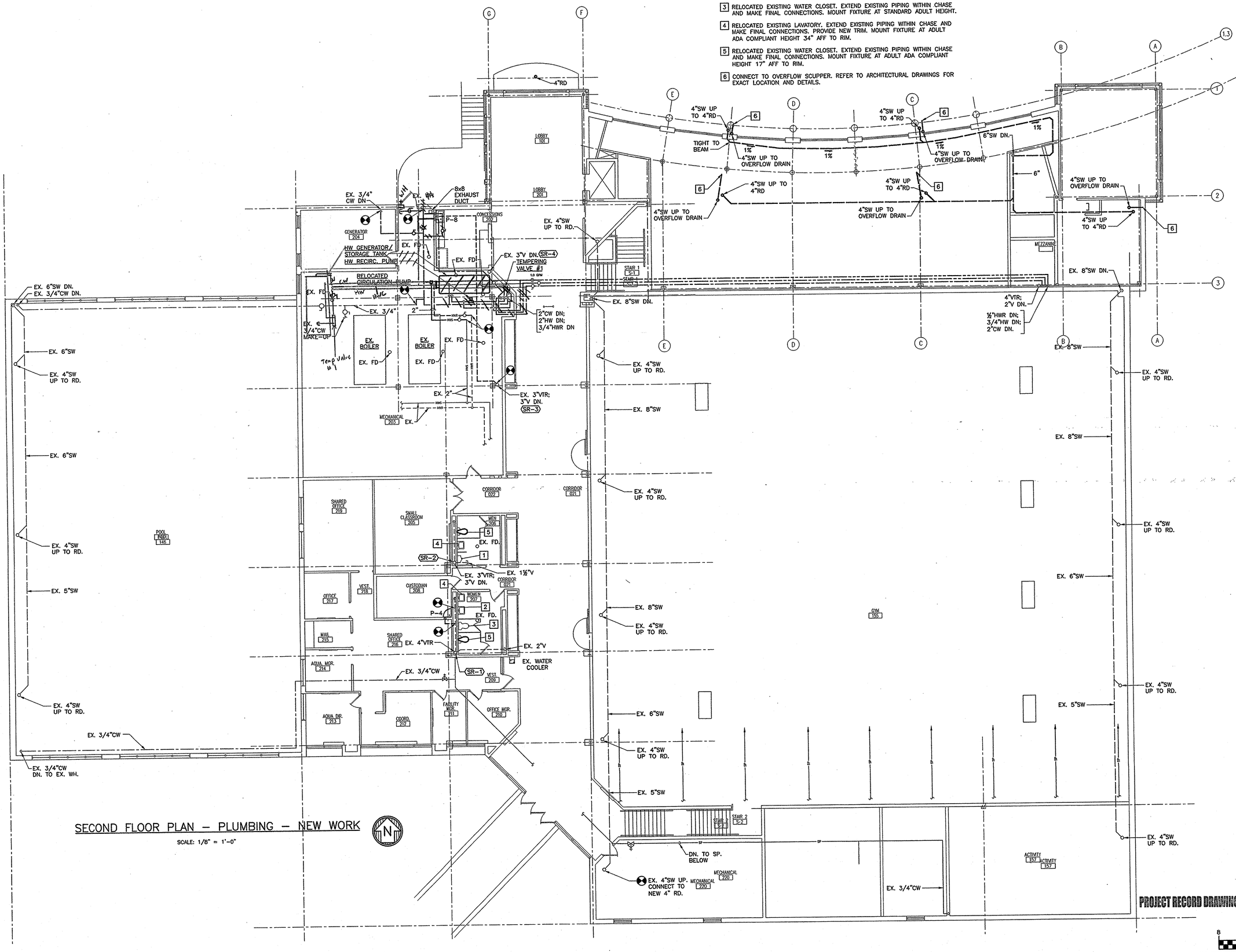

SECOND FLOOR PLAN – PLUMBING – NEW WORK

SCALE: 1/8" = 1'-0"

PROJECT RECORD DRAWINGS

SCALE: 1/8" = 1'-0"

RECEIVED JUN 17 2005

RECEIVED OCT 25 2004 BIPE ASSOC.

college of southern maryland

Gipe Associates Inc.
Consulting Engineers
Baltimore, Maryland
Easton, Maryland
GAI WO# 01044

"THIS DRAWING AND THE DESIGN AND CONSTRUCTION FEATURES DISCLOSED ARE PROPRIETARY TO GIPE ASSOCIATES, INC. AND SHALL NOT BE ALTERED OR REUSED IN WHOLE OR IN PART WITHOUT THE EXPRESS WRITTEN PERMISSION OF GIPE ASSOCIATES, INC. Copyright © 2001"

1355 Beverly Rd.
Suite 105
McLean VA 22101
703.903.9100
703.903.9755 Fax

Grimm and Parker Architects

SECOND FLOOR PLAN – PLUMBING – NEW WORK
COLLEGE OF SOUTHERN MARYLAND WELLNESS CENTER
LA PLATA, MARYLAND

DATE	DESCRIPTION
12-12-01	DD SUBMITTAL
2-8-02	DGS SUBMISSION
4-11-02	BID SET
4/20/03	BID SET

© GRIMM AND PARKER,P.C. 2001

P2.2

DGS# - CC-09-MC99-311

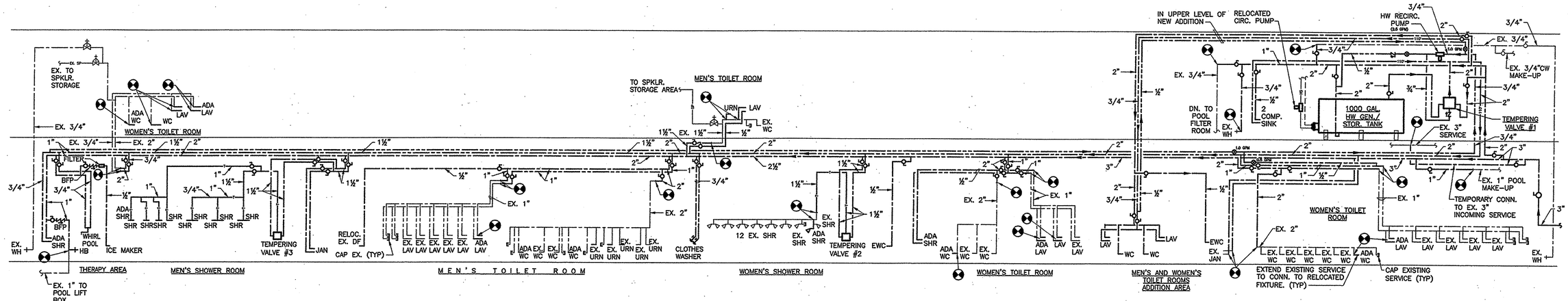

DOMESTIC WATER FLOW DIAGRAM

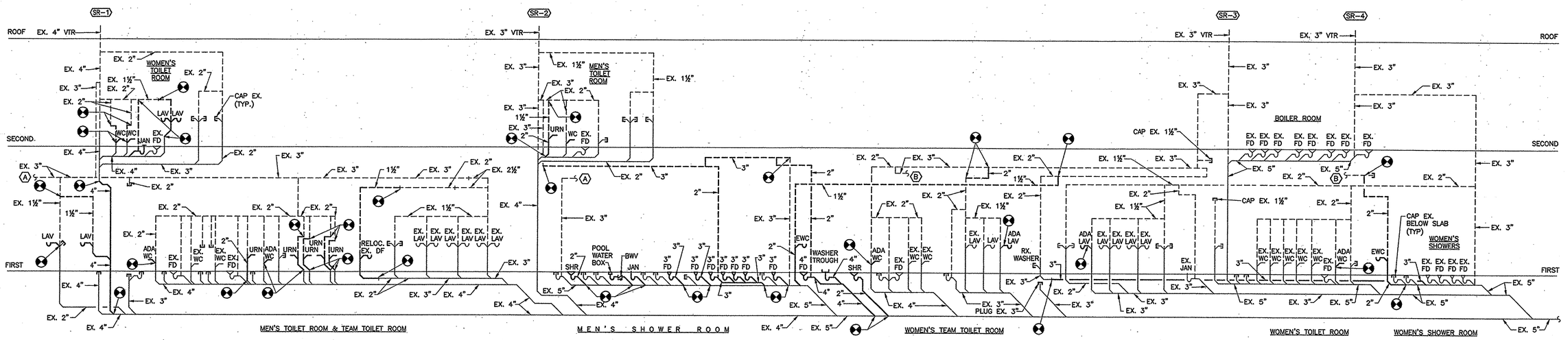

SANITARY AND VENT FLOW DIAGRAM

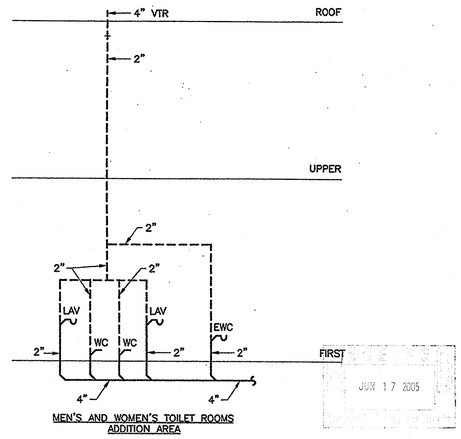

JUN 17 2005

PROJECT RECORD DRAWINGS

SANITARY AND VENT FLOW DIAGRAM

RECEIVED
OCT 25 2004

Gipe Associates, Inc.
Consulting Engineers
Baltimore, Maryland
Easton, Maryland
GAI WO# 01C

THIS DRAWING AND THE DESIGN AND CONSTRUCTION FEATURES INCORPORATED ARE PROPRIETARY TO GIPE ASSOCIATES, INC. AND SHALL NOT BE ALTERED OR REUSED IN WHOLE OR IN PART WITHOUT THE EXPRESS WRITTEN PERMISSION OF GIPE ASSOCIATES, INC. Copyright

1355 Beverly Rd.
Suite 105
McLean VA 22101
703.903.9100

Grimm and Parker

College of Southern Maryland

FLOW DIAGRAMS - NEW WORK

COLLEGE OF SOUTHERN MARYLAND WELLNESS CENTER

DATE	DESCRIPTION
12-12-01	DD SUBMIT
2-8-02	DGS SUBMIS
4-11-02	BID SET
4-30-03	BID SET

© GRIMM AND PARKER, P.C.

P6.1

DGS# - CC-09-MC99

1 IN-LINE HOT WATER RECIRCULATION PUMP DETAIL

SCALE: NONE

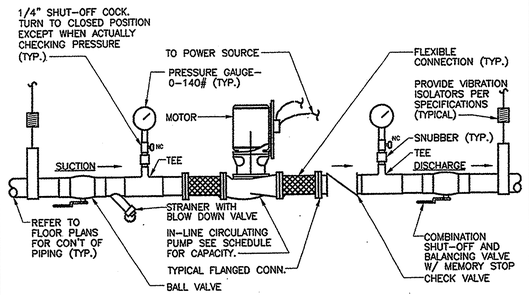

2 FLOOR CLEANOUT DETAIL

SCALE: NONE

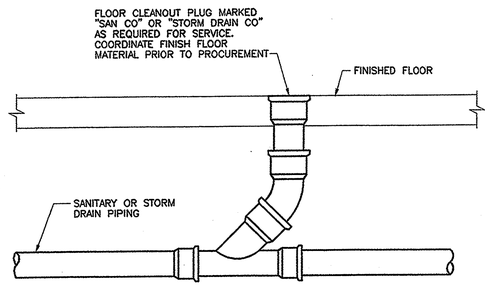

3 CLOTHES WASHER VALVE/DRAIN BOX INSTALLATION DETAIL

SCALE: NONE

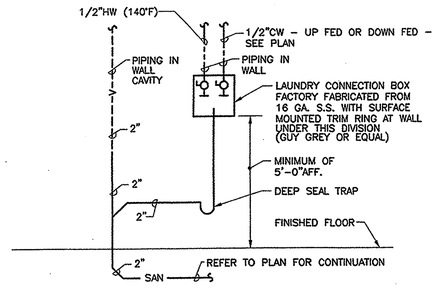

4 TRAP PRIMING STATION DETAIL

SCALE: NONE

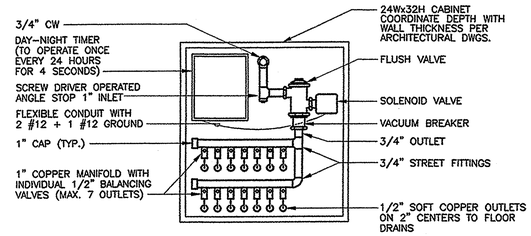

DETAIL NOTES:

TOTAL NUMBER OF OUTLETS SHALL BE DETERMINED BY THE NUMBER OF FLOOR DRAINS PRIMED WITHIN THE IMMEDIATE AREA. LOCATIONS SHALL BE IN JANITORS CLOSETS OR AS SHOWN ON PLAN. REFER TO RISER DIAGRAM FOR INDIVIDUAL TRAP PRIMERS.

5 TYPICAL SLEEVE THRU FLOOR DETAIL

SCALE: NONE

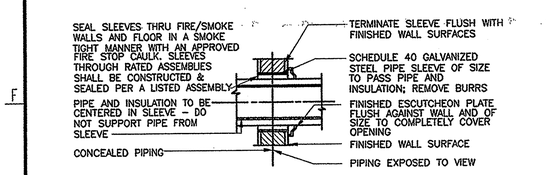

6 TYPICAL PIPE SLEEVE THRU EXTERIOR WALL ABOVE GRADE DETAIL

SCALE: NONE

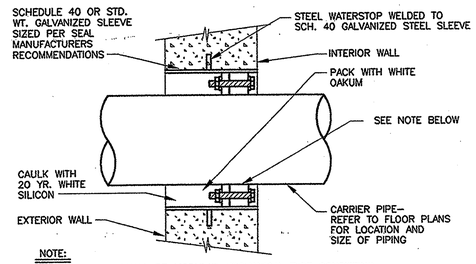

NOTE:

SEAL ASSEMBLY SHALL BE MODULAR MECHANICAL TYPE CONSISTING OF INTERLOCKING RUBBER LINKS SHAPED TO CONTINUOUSLY FILL THE ANNULAR SPACE BETWEEN THE CARRIER PIPING AND THE SLEEVE. BOLTS SHALL BE STAINLESS STEEL WITH DELRIN PLASTIC PRESSURE PLATES.

7 TYPICAL SANITARY VENT THRU ROOF DETAIL

SCALE: NONE

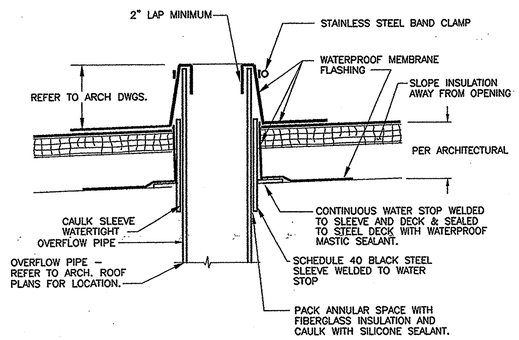

8 DETAIL-PIPE THRU EXTERIOR WALL PENETRATION SEAL BELOW GRADE

SCALE: NONE

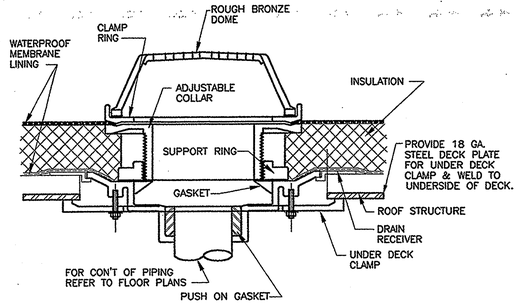

9 TYPICAL PIPE SLEEVE THRU INTERNAL WALL DETAIL

SCALE: NONE

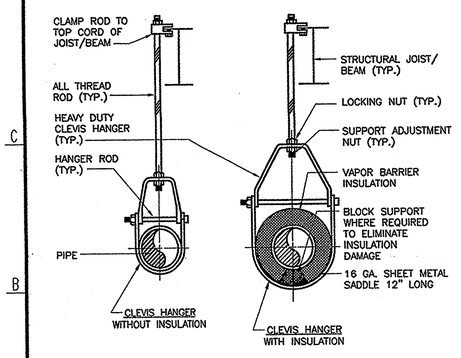

10 TYPICAL WATERTIGHT SLEEVE THRU EXTERIOR WALL DETAIL

SCALE: NONE

11 STORM WATER OVERFLOW PIPE THRU ROOF DETAIL

SCALE: NONE

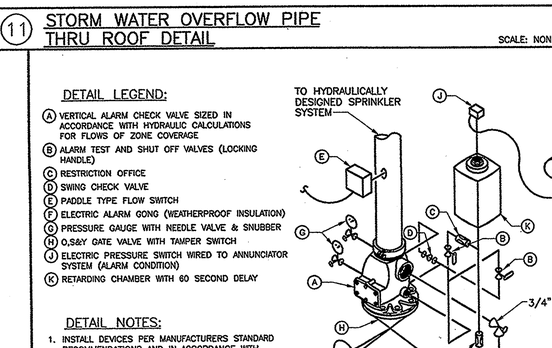

12 ROOF DRAIN DETAIL

SCALE: NONE

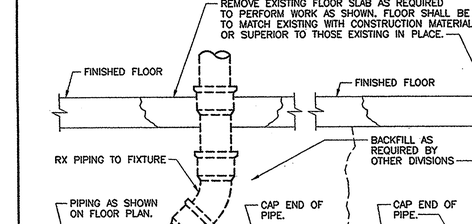

13 TYPICAL PIPE SUPPORT DETAIL

SCALE: NONE

14 HIGH-LOW TEMPERING VALVE #1 DETAIL

SCALE: NONE

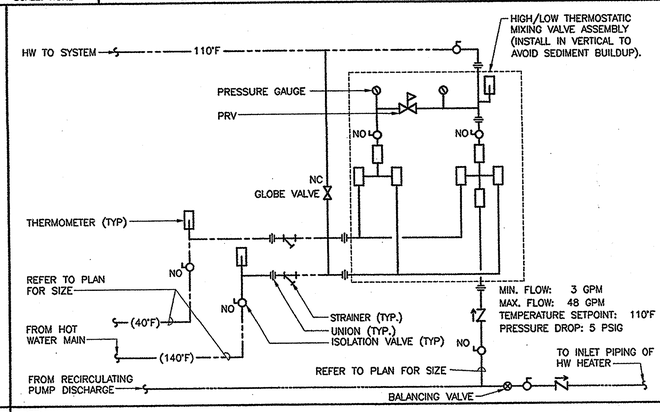

15 SPRINKLER ALARM VALVE ASSEMBLY DETAIL

SCALE: NONE

DETAIL LEGEND:

- (A) VERTICAL ALARM CHECK VALVE SIZED IN ACCORDANCE WITH HYDRAULIC CALCULATIONS FOR FLOWS OF ZONE COVERAGE
- (B) ALARM TEST AND SHUT OFF VALVES (LOCKING HANDLE)
- (C) RESTRICTION OFFICE
- (D) SWING CHECK VALVE
- (E) PADDLE TYPE FLOW SWITCH
- (F) ELECTRIC ALARM GONG (WEATHERPROOF INSULATION)
- (G) PRESSURE GAUGE WITH NEEDLE VALVE & SNUBBER
- (H) O,S&Y GATE VALVE WITH TAMPER SWITCH
- (J) ELECTRIC PRESSURE SWITCH WIRED TO ANNUNCIATOR SYSTEM (ALARM CONDITION)
- (K) RETARDING CHAMBER WITH 60 SECOND DELAY

DETAIL NOTES:

1. INSTALL DEVICES PER MANUFACTURERS STANDARD RECOMMENDATIONS AND IN ACCORDANCE WITH APPLICABLE NFPA STANDARDS.
2. COORDINATE WITH DIVISION 16000 AND BUILDING EMS.
3. PROVIDE FOR EACH ZONE (MAX 52,000 SQ FT COVERAGE)

16 TYPICAL UNDERSLAB PIPING DEMOLITION AND ABANDONMENT DETAIL

SCALE: NONE

RECEIVED
OCT 25 2004

PROJECT RECORD DRAWINGS

College of Southern Maryland

Gipe Associates Inc.
Consulting Engineers
Baltimore, Maryland
Easton, Maryland
GAI WO# 01044

"THIS DRAWING AND THE DESIGN AND CONSTRUCTION FEATURES DISCLOSED ARE PROPRIETARY TO GIPE ASSOCIATES, INC. AND SHALL NOT BE ALTERED OR REUSED IN WHOLE OR IN PART WITHOUT THE EXPRESS WRITTEN PERMISSION OF GIPE ASSOCIATES, INC. Copyright © 2001"

Grimm and Parker Architects

1355 Beverly Rd.
Suite 105
McLean VA 22101
703.903.9100
703.903.9755 Fax

DETAILS

COLLEGE OF SOUTHERN MARYLAND WELLNESS CENTER
LA PLATA, MARYLAND

DATE	DESCRIPTION
12-12-01	DD SUBMITTAL
2-8-02	DGS SUBMISSION
4-11-02	BID SET
4/29/03	BID SET

© GRIMM AND PARKER P.C. 2001

P7.1

DGS# - CC-09-MC99-311

P:\JOBS\2001\01044\plumbing\01044P7.1.dwg, 04/11/02 09:48:17 AM, jhp, 1:88

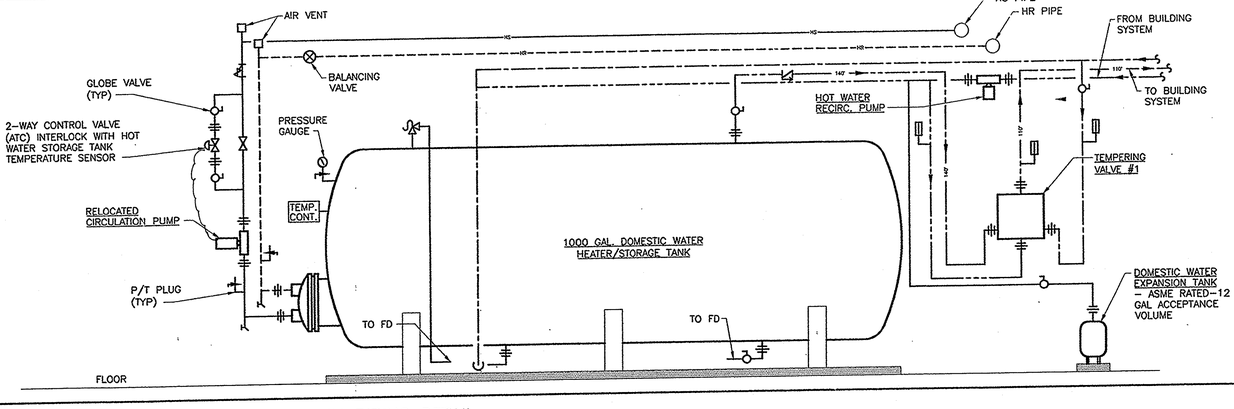

(17) DOMESTIC HOT WATER GENERATOR/STORAGE TANK PIPING DETAIL

SCALE: NONE

college of southern maryland

Gipe Associates Inc.
Consulting Engineers
Baltimore, Maryland
Easton, Maryland
GAI WO# 01044

"THIS DRAWING AND THE DESIGN AND CONSTRUCTION FEATURES DISCLOSED ARE PROPRIETARY TO GIPE ASSOCIATES, INC. AND SHALL NOT BE USED IN WHOLE OR IN PART OR ALTERED WITHOUT THE EXPRESS WRITTEN PERMISSION OF GIPE ASSOCIATES, INC. Copyright © 2001"

1355 Beverly Rd.
Suite 105
McLean VA 22101
703.903.9100
703.903.9755 Fax

Grimm + Parker Architects

DETAILS

COLLEGE OF SOUTHERN MARYLAND WELLNESS CENTER
LA PLATA, MARYLAND

DATE	DESCRIPTION
12-12-01	DD SUBMITTAL
2-8-02	DGS SUBMISSION
4-11-02	BID SET
1/30/03	BID SET

© GRIMM AND PARKER P.C. 200

P7.2

DGS# - CC-09-MC99-3

RECEIVED
JUN 17 2003

RECEIVED
OCT 25 2004
GIPE ASSOC.

PROJECT RECORD DRAWINGS

P:\JOBS\2001\01044\plumbing\01044P7.2.dwg, 04/11/02 08:48:16 AM, Jeg, 1:88

GENERAL NOTES: (PLUMBING)

A. COORDINATE NEW WORK BETWEEN ALL DISCIPLINES.

B. REFER TO SECTIONS ON ARCHITECTURAL AND MECHANICAL DRAWINGS FOR PIPE ROUTING THROUGH THE FACILITY.

C. COORDINATE FLOOR DRAIN LOCATIONS WITH MECHANICAL EQUIPMENT PLACEMENT PRIOR TO SETTING FLOOR DRAINS. DRAINS SHALL BE LOCATED AS CLOSE TO EQUIPMENT DRAIN POINTS AS POSSIBLE.

D. CONDENSATE FROM AIR HANDLING UNIT COILS SHALL BE PIPED TO THE STORM DRAIN SYSTEM PIPING.

E. COORDINATE PLUMBING PIPING ENCLOSURES WITH ARCHITECTURAL DRAWINGS PRIOR TO SETTING PIPING BELOW SLABS.

F. FIELD VERIFY PIPING MATERIALS AND SIZES PRIOR TO CONNECTION THERETO.

G. PROVIDE SHUTOFF VALVES IN DOMESTIC WATER SYSTEM BRANCH LINES SERVING TWO OR MORE FIXTURES.

H. INSTALL PIPING SO VALVES ARE ACCESSIBLE.

I. WHERE HOT AND COLD WATER PIPING DROPS INTO PIPE CHASE, THE SIZE SHOWN FOR THE PIPE DROPS SHALL BE USED TO THE LAST FIXTURE.

J. ITEMS SUCH AS ACCESS DOORS, RISE AND DROPS IN PIPING, ETC., ARE INDICATED ON THE DRAWINGS FOR CLARITY OR A SPECIFIC LOCATION REQUIREMENT AND SHALL NOT BE INTERPRETED AS THE EXTENT OF THE REQUIREMENTS FOR THESE ITEMS. THE CONTRACTOR IS RESPONSIBLE FOR THESE ITEMS AS REQUIRED ELSEWHERE IN THE CONTRACT DOCUMENTS.

EQUIPMENT CAPACITIES: (PLUMBING)

DOMESTIC WATER HEATER #1 – 140° DELIVERY TEMPERATURE

DOUBLE WALL COPPER TUBE TANK HEATER MODEL ~~DW12-60, 104 SQ. FT AREA OF HEATING SURFACE;~~
BOILER WATER: EWT 190° LWT 170° 44 GPM PD 3.8 FT.
TANK WATER: EWT 40° LWT 140°
RECOVERY RATE: 22 GPM

APPROVED MANUFACTURERS: A.O. SMITH, PATTERSON KELLY

DOMESTIC WATER HEATER STORAGE TANK

48" DIA. x 137"H
1000 GALLON, GLASS LINED, HORIZONTAL STEEL
BASED ON MODEL HD48-1000 BY A.O. SMITH

FIRE PUMP

CLOSE COUPLED, END SUCTION, VERTICAL DISCHARGE PUMP,
150 FT. TDH, 500 GPM, 1760 RPM, 25 HP
TACO MODEL 3013

RECIRCULATION PUMPS

PUMP #1 110° HOT WATER RECIRCULATION:
1/3 HP, 115V-60HZ-1PH
1725 RPM
2.5 GPM AT 17.58 FT. HEAD
BASED ON TACO MODEL 112 IN-LINE CIRCULATOR

TEMPERING VALVES

TEMPERING VALVE #1
(BUILDING MAIN SYSTEM)
SYSTEM: HIGH/LOW 140°F TO 110°F
HIGH: 48 GPM
LOW: 3 GPM
PRESS. DROP: 5 PSI
BASED ON LEONARD MODEL TM-186-12520-PRV.

TEMPERING VALVE #2 & #3
(SHOWER TEMPERING VALVE)
SYSTEM: HIGH/LOW 110°F TO 95°F
HIGH: 26 GPM
LOW: 2.5 GPM
PRESS. DROP: 5 PSI
BASED ON LEONARD MODEL TM-186-8015-PRV.

PUMP SCHEDULE

SERVICE	GPM	FT. OF HEAD	HP	RPM	ELECT. CHAR. V/ø/Hz	TYPE	REMARKS (BASED ON)
FIRE PUMP	250	175	20	3500	460V/3ø/60HZ	VERTICAL IN-LINE	PEERLESS PUMP MODEL 3PVF8

PLUMBING LEGEND

SYMBOL	ABBREVIATION	DESCRIPTION
— — —	CW	COLD WATER
— — —	HW	HOT WATER(110°)
— — —	HWR	HOT WATER RETURN(110°)
—140—	140°	140° DOMESTIC HOT WATER
—140R—	140°R	140° DOMESTIC HOT WATER
—F—	"F"	FIRE LINE
—SP—	SP	SPRINKLER LINE
	EX	EXISTING
—PD—	PD	PUMPED DISCHARGE
—G—	G	LP GAS
		DUPLEX GAS OUTLET
—SAN—	SAN	SANITARY
—V—	V	VENT
SR-X		SANITARY/VENT RISER DESIGNATION
—SD—	SD	STORM DRAIN
—IW—	IW	INDIRECT WASTE
—FD—	FD	FOUNDATION DRAIN
		BALL VALVE
	FCO	FLOOR CLEANOUT
	WCO	WALL CLEANOUT
	CO	CLEANOUT
	UP	PIPE UP
	UP&DN	PIPE UP & DN
	DN	PIPE DN (SHOWN PLAN/ELEVATION)
		SIGHT GLASS
		FLOAT VALVE
	PH	PIPE HANGER
	FD	FLOOR DRAIN WITH TRAP PRIMER
	AD	AREA DRAIN
(P)	RD	ROOF DRAIN (WITH SQUARE FOOTAGE INDICATED)
	DST	DEEP SEAL TRAP (SHOWN PLAN/ELEVATION)
	VTR	VENT THROUGH ROOF (SHOWN PLAN/ELEVATION)
		BUTTERFLY VALVE
		GATE VALVE
		GLOBE VALVE
		MIXING VALVE
(P)	PRV	PRESSURE REDUCING VALVE (PRESSURE INDICATED)
		CHECK VALVE
	DDC	DOUBLE DETECTOR CHECK VALVE
	BFP	BACKFLOW PREVENTER
		METER (FLUID OR GAS)
"	IN	INCHES
'	FT	FEET
	WH	WALL HYDRANT
	NFWH	NON-FREEZE WALL HYDRANT
	HED	HOSE END DRAIN
OTS	O,S&Y	OUTSIDE STEM & YOKE VALVE W/TAMPER SWITCH
OTS	NRS	NON-RISING STEM & YOKE WITH TAMPER SWITCH
FS	FS	FLOW SWITCH
TS	TS	TAMPER SWITCH
	FDV	FIRE DEPT HOSE CONNECTION
FCVA FS	FCVA	FLOOR CONTROL VALVE ASSEMBLY
		"Y" STRAINER
	WHA	WATER HAMMER ARRESTOR
	AP	ACCESS PANEL
		POINT OF CONNECTION TO SITE UTILITIES
	HB	HOSE BIBB
— AW —	AW	ACID RESISTANT WASTE
— AV —	AV	ACID RESISTANT VENT
--PSC--	PSC	PUMPED STEAM CONDENSATE
		SQUARE FOOTAGE
PS	PS	PRESSURE SWITCH

SYMBOL	ABBREVIATION	DESCRIPTION
	LOC	LIMIT OF CONTRACT
		ECCENTRIC REDUCER
		CONCENTRIC REDUCER
		FLEXIBLE CONNECTION
	CAP	CAPPED PIPE
	BF	BLIND FLANGE
	VB	VACUUM BREAKER
	MAV	MANUAL AIR VENT
	AAV	AUTOMATIC AIR VENT
		BALANCING VALVE
	BDV	BLOW DOWN VALVE (W/HOSE END/DRAIN VALVE)
		UNION
		PRESSURE/TEMPERATURE RELIEF VALVE
	CX	CONNECT TO EXISTING
Δ P		PRESSURE DIFFERENCE
Δ T		TEMPERATURE DIFFERENCE
	INV ELEV	INVERT ELEVATION
	℄	CENTER LINE
		THERMOMETER
		PRESSURE GAUGE WITH NEEDLE VALVE & SNUBBER
Ø	DIA	DIAMETER (OR ELECTRICAL PHASE)
	BWV	BACK WATER VALVE WITH ACCESS COVER
		PIPING BELOW GRADE OR SLAB
		SOLENOID VALVE (HIGH TEMP SHUTOFF VALVE)
		SLOPE OF PIPE (WITH % OF SLOPE SHOWN)
		DIRECTION OF FLOW
	FC	FUNNEL CONNECTION @ FLOOR DRAIN
	AFF	ABOVE FINISHED FLOOR
	ABV	ABOVE
	ANC	ANCHOR
	AQ	AQUASTAT
	APPROX	APPROXIMATE
	BHP	BRAKE HORSEPOWER
	BOP	BOTTOM OF PIPE
	BTU	BRITISH THERMAL UNIT
	BTUH	BRITISH THERMAL UNIT PER HOUR
	BOTT	BOTTOM
	CONN	CONNECT
	CU FT	CUBIC FEET
	CAP	CAPACITY
	CLG	CEILING
	CONC	CONCRETE
	DWG	DRAWING
	DN	DOWN
	DISH	DISCHARGE
	ELEC	ELECTRIC
	EWT	ENTERING WATER TEMPERATURE
	STD	STANDARD
	CI	CAST IRON
	SCH	SCHEDULE
	HYD	HYDRAULIC
	ELEV	ELEVATION
	GPM	GALLONS PER MINUTE
	GA	GAUGE
	GALV	GALVANIZED
	FT.HD	FEET OF HEAD
	–	PIPING BELOW SLAB
	HOR	HORIZONTAL
	HP	HORSEPOWER
	HTR	HEATER

NOTE: NOT ALL SYMBOLS AND ABBREVIATIONS MAY BE USED.

PLUMBING FIXTURE SCHEDULE

DESIG.	FIXTURE	ROUGH-IN CONNECTION C.W.	H.W.	SAN.	VENT	FIXTURE UNIT VALUES C.W.	H.W.	SAN.	REMARKS
P-1	WATER CLOSET (WH)	1"	----	4"	2"	10	----	6	ADULT ADA ACCESSIBLE
P-2	NOT USED	----	----	----	----	----	----	----	
P-3	LAVATORY (WH)	1/2"	1/2"	1 1/2"	1 1/2"	1.5	1.5	2	ADULT ADA ACCESSIBLE
P-4	MOP SINK	3/4"	3/4"	3"	1 1/2"	2.25	2.25		
P-5	ELECTRIC WATER COOLER	1/2"	--	1 1/2"	1 1/2"	.25	----	1/2	ADULT ADA ACCESSIBLE
P-6	2 COMPARTMENT SINK	1/2"	1/2"	2"	2"	1.5	1.5	2	ADA ACCESSIBLE
P-7	SHOWER	–	1/2"	2"	--	1	1	2	ADULT; 2 SIDED; SINGLE TEMPERATURE WATER SUPPLY
P-7A	SHOWER	–	1/2"	2"	--	1	1	2	ADULT; 1 SIDED; SINGLE TEMPERATURE WATER SUPPLY
P-7B	SHOWER	–	1/2"	2"	--	1	1	2	ADULT; 2 SIDED W/ ADA; SINGLE TEMP. WATER SUPPLY
P-7C	SHOWER STALL	1/2"	1/2"	2"	1 1/2"	1	1	2	ADULT ADA ACCESSIBLE
P-8	THERAPY STATION	1/2"	1/2"	--	--	1.5	1.5	--	

WH DESIGNATES WALL HUNG UNIT.

RECEIVED JUN 17 2005 DIRECTOR OF PLANNING

RECEIVED OCT 25 2004 SIDE ASSOC

PROJECT RECORD DRAWINGS

College of Southern Maryland
Gipe Associates Inc.
Consulting Engineers
Baltimore, Maryland
Easton, Maryland
GAI WO# 01044

"THIS DRAWING AND THE DESIGN AND CONSTRUCTION FEATURES DISCLOSED HEREIN ARE PROPRIETARY TO GIPE ASSOCIATES, INC. AND SHALL NOT BE ALTERED OR REUSED IN WHOLE OR IN PART WITHOUT THE EXPRESS WRITTEN PERMISSION OF GIPE ASSOCIATES, INC. Copyright © 200

1355 Beverly Rd.
Suite 105
McLean VA 22101
703.903.9100
703.903.9755 Fax

Grimm and Parker Architects

GENERAL NOTES; EQUIPMENT CAPACITIES; SCHEDULES AND LEGEND
COLLEGE OF SOUTHERN MARYLAND WELLNESS CENTER
LA PLATA, MARYLAND

DATE	DESCRIPTION
12-12-01	DD SUBMITTAL
2-8-02	DDS SUBMISSION
4-11-02	BID SET
4/30/03	BID SET

© GRIMM AND PARKER P.C. 200

P9.1

DGS# - CC-09-MC99-31

P:\JOBS\2001\01044\plumbing\01044P9.1.dwg, 04/11/02 09:47:36 AM, jlog, 1:96